INSTALLATION OF OLDSMOBILE FLARESTAT®*

(FOR FULL SIZE CAR SERIES)

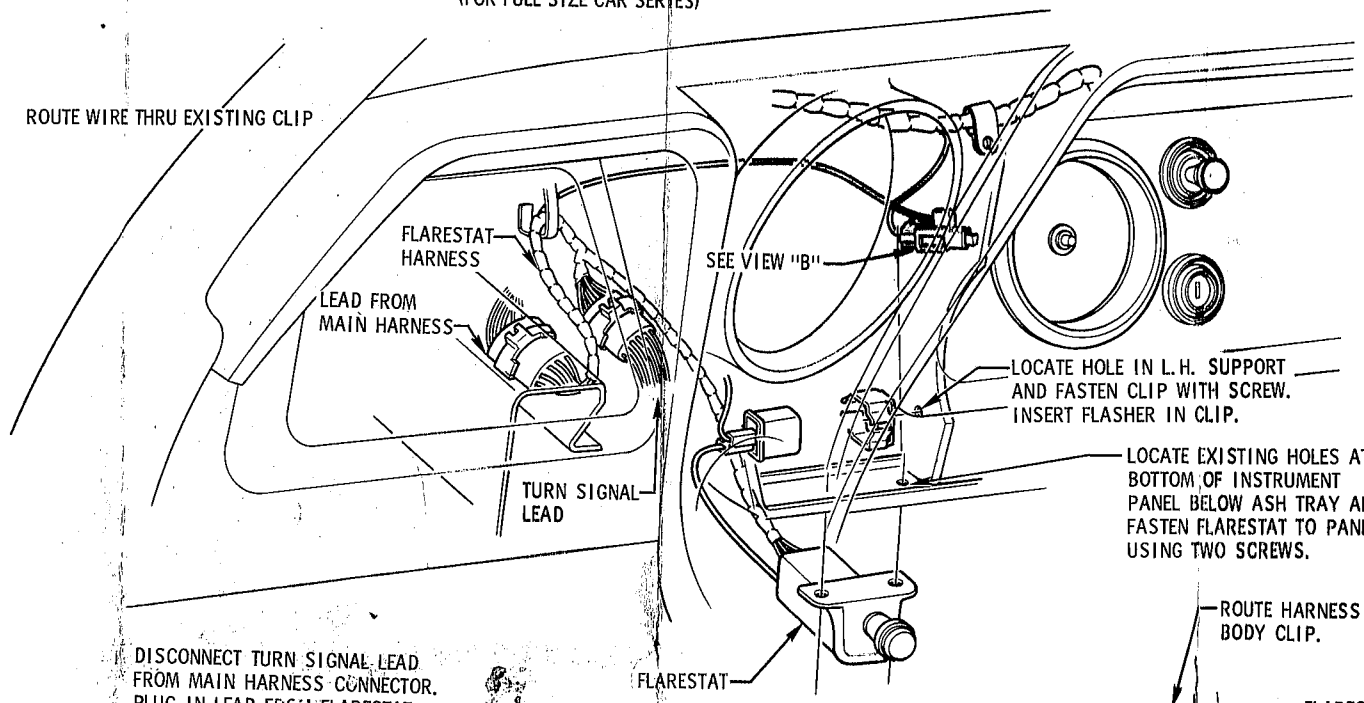

DISCONNECT TURN SIGNAL LEAD FROM MAIN HARNESS CONNECTOR. PLUG IN LEAD FROM FLARESTAT HARNESS. PLUG TURN SIGNAL LEAD INTO REMAINING CONNECTOR ON FLARESTAT HARNESS. SEE VIEW "A".

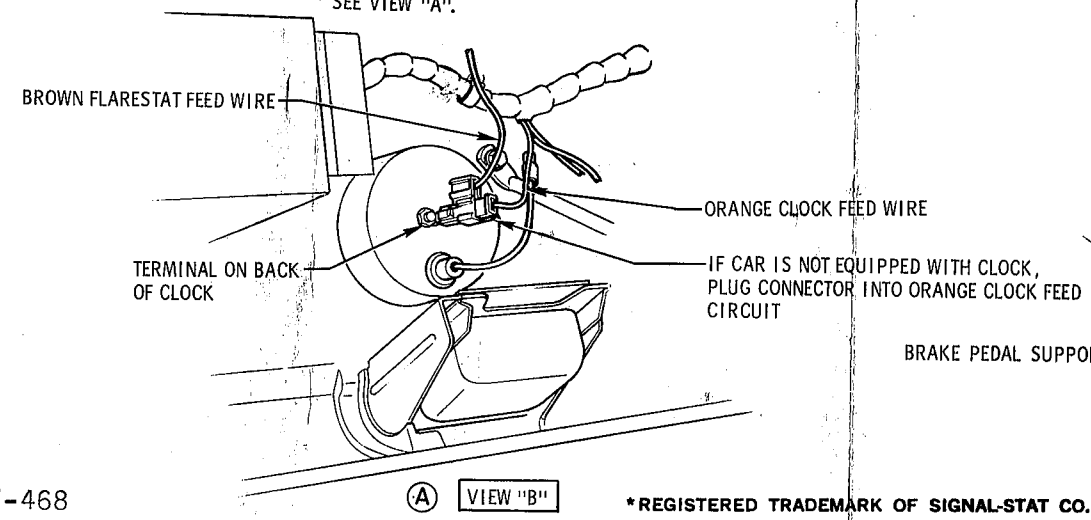

Ⓐ VIEW "B"

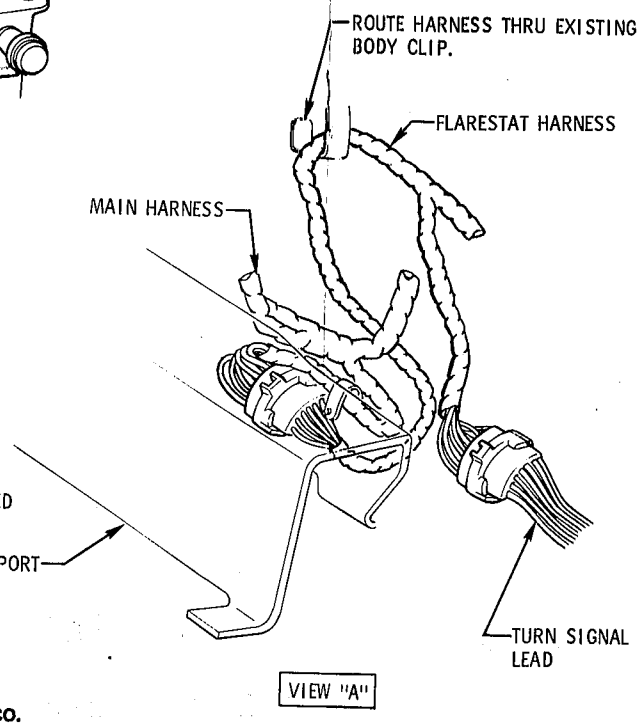

VIEW "A"

*REGISTERED TRADEMARK OF SIGNAL-STAT CO.

Ⓑ